CONTACT:

Office of The Director III
DepEd-BLR
Sudlon, Lahug, Cebu City
Philippines
6000

Email: blr.cebu@deped.gov.ph

Department of Education
BUREAU OF LEARNING RESOURCES

SCIKIT BASIC EQUIPMENT User Manual

2020 edition

DepEd - BLR

BUREAU OF LEARNING RESOURCES (CEBU)
(FORMERLY NATIONAL SCIENCE TEACHING INSTRUMENTATION CENTER)

The National Science Teaching Instrumentation Center (NSTIC) started as a Philippine-German Cooperation Project under the then Department of Education, Culture and Sports, implemented by DECS-EDPITAF and GTZ (German Agency for Technical Cooperation). It was established under Executive Order No. 112 on July 22, 1993 by his Excellency, President Fidel V. Ramos.

With close coordination with the Department of Science and Technology (DOST), the Center is tasked to carry out the following objectives:

To develop prototypes of science teaching equipment and materials using indigenous materials and locally available technology, adapted to the curriculum and tested for learning effectiveness for adoption by the school system;

To develop user's manuals and experimentation manuals for science teaching equipment;

To develop and prescribe standards for science teaching equipment and materials in the country;

To assist the private sector in developing its capability to mass produce the science equipment prototypes developed by the Center by;

a) providing technical assistance to local manufacturers; and
b) establishing collaborative linkages for data and information exchanges between the education sector and the manufacturing industries such as the education sector's demand for and the private sector's capability to supply science equipment and parts thereof;

To develop and provide training programs for science teachers for the effective teaching of science using the instructional equipment and materials developed by the Center as well as those that may be developed by the teachers themselves;

To undertake quality control of science equipment and materials being provided to the public schools, in order to ensure that these equipment and materials meet the technical specifications set forth by the Center; and

To develop and implement a system of repair and maintenance of science equipment provided to the public schools.

The Center houses facilities for prototype fabrication of science teaching equipment as well as research and training facilities for educational and technical development.

With the advent of the Rationalization Plan the National Science Teaching Instrumentation Center (NSTIC) was merge with three other bureaus of the Department of Education and became collectively known as Bureau of Learning Resources. The former NSTIC, in Cebu City is now one of the two BLR offices the other of which is situated at the DepEd Complex, Meralco Avenue, Pasig City.

MAINTENANCE AND STORAGE TIPS

Inserting rods or turning screws into their respective holes can be difficult especially when the equipment is used for the first time. Apply lubricant on the portion of the rod or screw to be inserted. Use light machine oil as lubricant. Never try to enlarge the hole to facilitate easy insertion as the fit between rod and hole is very important for stability.

When equipment is not used for a long time, i.e., during long vacations, see to it that they are dry before storing them inside the cabinet. Better still, apply oil on screws. During storage, put the heavier items on the lower shelves. Lay the stand rods flat on the bottom-most shelf.

Oxidation can be manifested by dark spots on the surface of zinc-aluminum alloy. If the equipment is not corroded, just leave the oxidized surface because this also provides some form of protection for the metal against reagents. On the other hand, if the material gets unsightly with oxides, you can polish the metal using fine sand paper # 600 and put your equipment back into shape.

When reagents spill onto the metal items, wipe the exposed surfaces with wet rags soaked in soap solution. Rinse these items with water after the experiment then wipe dry. If these apparatus are to be stored immediately after the activity, apply light machine oil on the surfaces.

NOTE : Should parts/accessories be missing, destroyed or broken or should you have further inquiries, please contact the Bureau of Learning Resources Cebu. See the back cover for contact details.

Contents | Page

Introduction

This edition of basic science equipment manual goes with the change in the nomenclature of then NSTIC (now Bureau of Learning Resources Cebu—BLR) developed equipment. BLR naming of developed equipment was done by batches called Batch A for basic equipment, and Batch B for mechanics. The next batches would be called Batch C, Batch D, and so on. To simplify and for quick identification, the equipment group is now directly named for its application. Thus, this manual for basic equipment is called SciKit Basic Science Equipment Manual.

As with the previous editions, this manual contains step-by-step assembly instructions with blown up diagrams. Each individual equipment is presented with drawings and a brief description of functions. Item parts are shown by arrows for a quick guide.

Equipment handling and safety precautions are discussed first before going into assembly details. Please read this section thoroughly before you start using the equipment. This is very important!

Suggested experiment setups are found in the latter part of the manual. Sample experiments contain detailed list of materials, including miscellaneous items. Discussions on the basic ideas of the concepts involved follow.

The last part of the manual presents simple maintenance and troubleshooting guides.

If you have questions and suggestions, please contact BLR Cebu. Our contact details are found at the back cover of this manual.

Procedure:

1. Assemble the setup as shown.
2. See to it that all components are well-secured.
3. Pour 50 ml of dyed water into the flask and secure the flask to the universal clamp attached to the left stand rod. Do not over tighten the clamp as it might break the flask.
4. Clamp the measuring cylinder with the universal clamp attached to the stand rod on the right. See the figure on page 13.
5. Insert one end of the glass tubing into the hole of the stopper and insert the rubber stopper firmly into the flask mouth.
   Note: See to it that there is no air leak between the rubber stopper and glass tubing and between the rubber stopper and the mouth of the flask.
6. The free end of the glass tubing should be properly positioned inside the graduated cylinder. (see figure) Leave about 10 cm. distance between the bottom of the cylinder and the tip of the glass tubing.
7. Ignite the burner and place it under the flask.
8. As the colored water inside the flask starts to boil you will see that the glass tubing turns cloudy in appearance. This is due to water vapor moving thru the glass tubing.
   CAUTION: Never touch any part of the setup during the activity. They are very hot!
9. Drip small amounts of cold water into the condenser to cool down the vapor during the boiling of the water inside the flask.
10. Keep the flame burning until some liquid collects inside the cylinder.
11. Extinguish the burner when the measuring cylinder contains approximately 10 ml of liquid.
12. Compare the liquid inside the flask with the liquid collected inside the cylinder.
    CAUTION: YOU ARE WORKING WITH HOT MATERIALS

DISCUSSION:

1. Distillation is a process that separates a substance from a mixture through vaporization. The mixture may consist of two or more substances with different boiling points or a solution consisting of at least one volatile and one non-volatile component.
2. Distillation usually involves heating a liquid and condensing the vapor that forms.
3. The mixture to be vaporized is heated in a boiler. Vapor enters the condenser where it cools and becomes liquid again and drips towards the collection/receiver cylinder.
4. Unwanted solids and contaminants are left behind inside the boiling flask and can be drained away.
5. Distillation replicates nature’s process of purifying water.
6. Industrial distillation processes consume enormous amounts of energy, both in terms of heating and cooling requirements.

III. Basic Distillation

Purpose: To demonstrate the process of distillation.

Materials:
Stand setup III:
3 pcs stand rods, 9.5 mm X 500 mm
2 pcs stand base
2 pcs multiclamp
2 pcs universal clamps
1 pc universal bosshead

Accessories:
1 pc Erlenmeyer flask
1 pc glass tubing, bent 90°
1 pc graduated cylinder, 100 ml
1 pc alcohol burner
1 pc rubber stopper w/ 1 hole

Miscellaneous:
dyed water
damp rags (as fire extinguisher)
matches

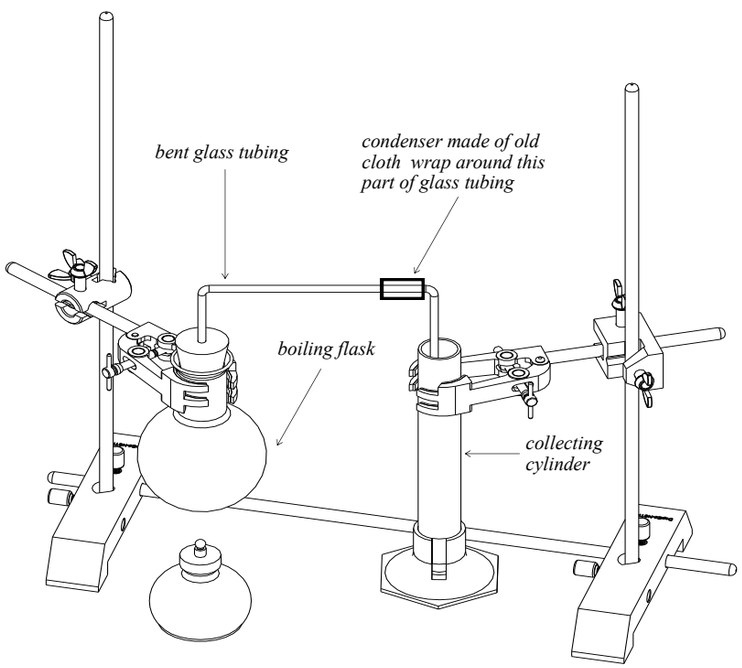

EQUIPMENT LIST

Fig 1. **STAND BASE**

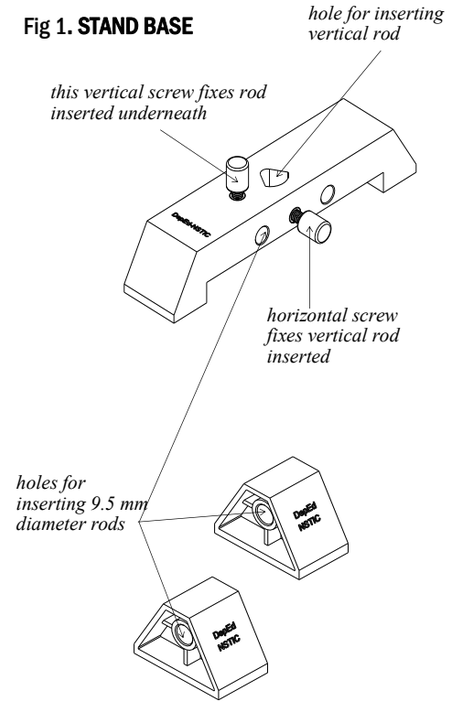

The STAND BASE is the basic support of your experiment setup. The vertical screw on top of the base body is for fixing the rod inserted horizontally through a hole underneath. The horizontal screw on the side of the base body is for fixing the rods that are vertically mounted. Large and small rods that are provided can be mounted vertically through the hole shown in the figure. See pages 6 and 7 for the assembly guide. See page 15 for the maintenance guide.

Fig 2. **PAIR OF STAND SUPPORTS**

The PAIR OF STAND SUPPORTS is primarily intended to be used with the stand base. The hole on each support is designed to fit a 9.5 mm diameter rod only. Never force a larger 12.7 mm diameter rod into the hole of the stand support. See the assembly guide on page 6. See page 15 for the maintenance guide.

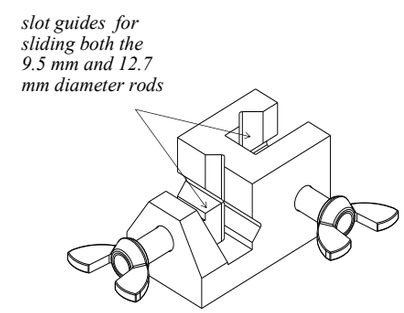

Fig 3. **MULTICLAMP**

The MULTICLAMP is for inter-connecting rods (both the 9.5 mm and 12.7 mm diameter) perpendicularly. The component setup assemblies can be conveniently adjusted to different positions along support rods. See page 7 for the assembly guide. See page 15 for the maintenance guide.

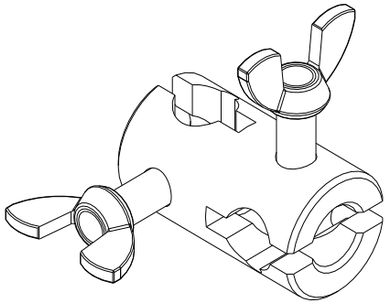

The UNIVERSAL BOSSHEAD can also mount and fix the component assemblies at different positions along the stand rod. A special feature of this item is that it can connect two stand rods to increase length as required in the experiment setup. See page 8 for the assembly guide, page 15 for the maintenance guide.

FIG 4. **UNIVERSAL BOSSHEAD**

The UNIVERSAL CLAMP is your helping hand during an experiment. It is very useful for holding various devices, glassware, tubing, etc. during experiments. See page 8 for the assembly guide and page 15 for the maintenance guide.

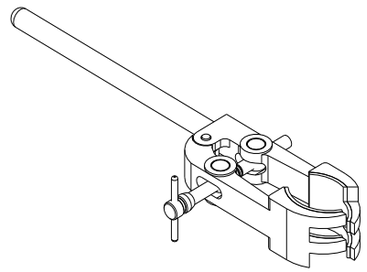

FIG 5. **UNIVERSAL CLAMP**

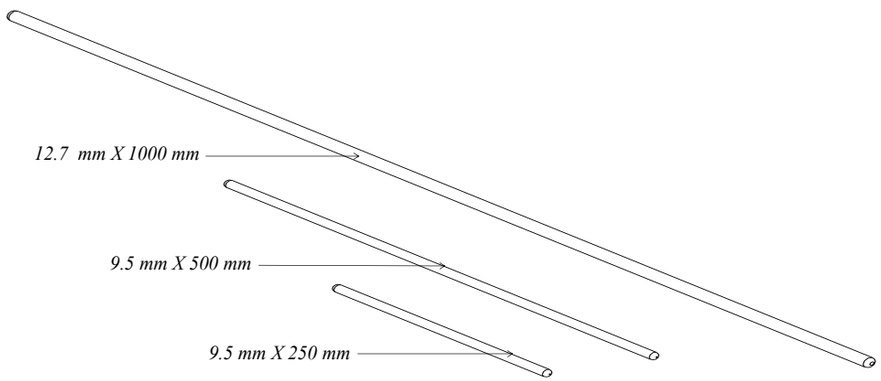

Fig 6. **SET OF STAND RODS**

The SET OF STAND RODS contains 5 pieces each of the following: *9.5 mm X 250 mm*, *9.5 mm X 500 mm*, *12.7 mm X 1000 mm* rods. The shortest rod is mostly used as horizontal support while the longer rods are often used as stands for mounting and fixing components via clamps. See pages 6 to 8 for the assembly guide. See page 15 for maintenance and storage.

Procedure:

THE IDEA OF THIS EXPERIMENT IS TO MONITOR THE TEMPERATURE OF THE WATER INSIDE THE BEAKER DURING HEATING.

1. Assemble the experiment setup as shown. Make sure all attached components are well-secured, especially the universal clamp holding the beaker with water.
2. Set a distance of about 10 mm between the beaker and the burner wick.
3. Pour 100 ml of water into the beaker.
4. Place the burner below the beaker only when the burner is working properly. Start the clock at the same time.
5. As much as possible, keep the setup away from wind.
6. Record the temperature at, say, 1 minute intervals.
7. Extinguish the flame after the water has boiled.

DISCUSSION:

a. All substances possess internal energy.
b. Internal energy is the sum of the potential and kinetic energies of the molecules and atoms the substance is made of.
c. A change in the temperature of a substance corresponds to a change in the kinetic energy of its molecules.
d. The kinetic energy of the molecules of hot water is greater than that of cold water.

More Activities:

1. The teacher may let different groups work with different amounts of water and find out how the temperature increase is affected by the amount of water, e.g., if the amount of water is doubled, will the time it takes to reach the same temperature double also?
2. Dissolve different amounts of solutes into the water and find out how the boiling point of the water is affected by the dissolved solutes (boiling point elevation). Use table salt and sugar, as solutes.
3. Students can also monitor cooling down of hot beverages, e.g., a cup of coffee, glass of milk, chocolate drink, etc.

II. Internal Energy Changes

Purpose: To investigate the internal energy changes of a substance.

Materials:
Stand setup II:
2 pcs stand rods, 9.5 mm X 500 mm
2 pcs stand bases
1 pc multiclamp
1 pc universal bosshead
1 pc universal clamp

Accessories:
1 pc 250 ml beaker
1 pc alcohol lamp
1 pc thermometer, -10°C to 100°C
1 pc stopwatch

Miscellaneous:
100 ml water
damp rags (as fire extinguisher)
matches

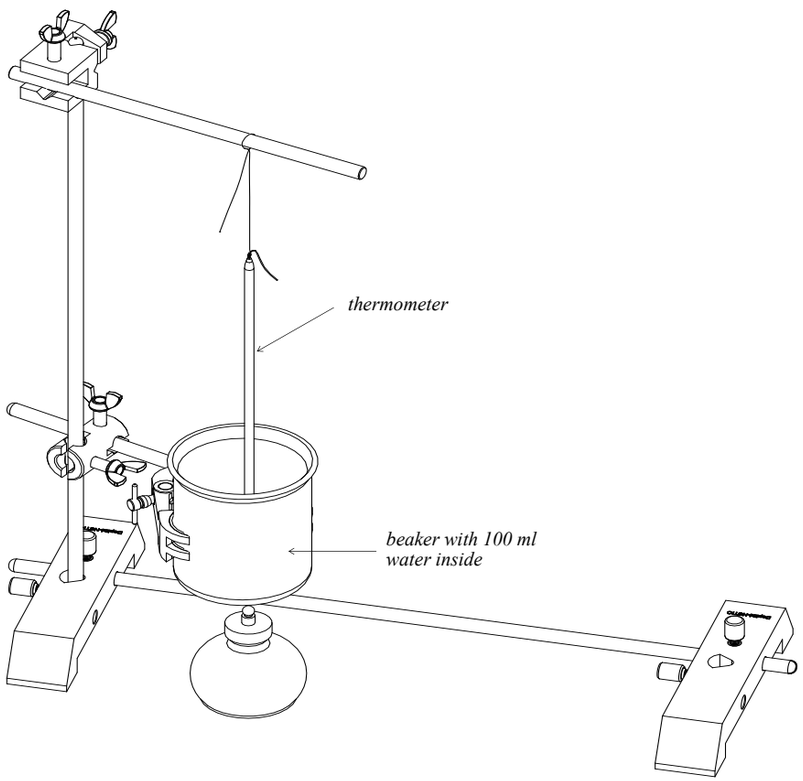

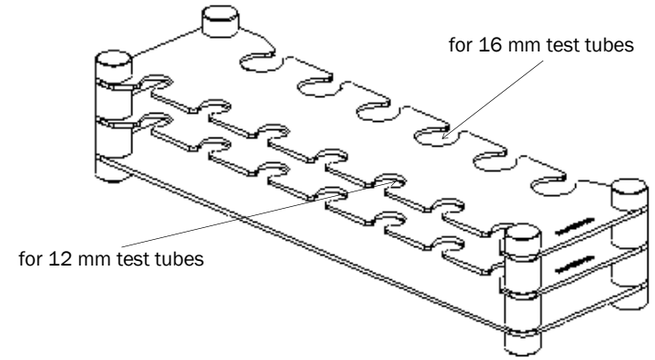

FIG 7. **TEST TUBE RACK**

This TEST TUBE RACK can support different sizes of test tubes. The large hole is for the 16 mm diameter test tube, while the smaller hole is for the 12 mm diameter test tubes. The slotted guide holes give observers unobstructed view of the entire length of test tubes containing samples. As a safety precaution, insert test tubes slowly through the holes, and do not just drop these into the holes. For the maintenance guide see page 15.

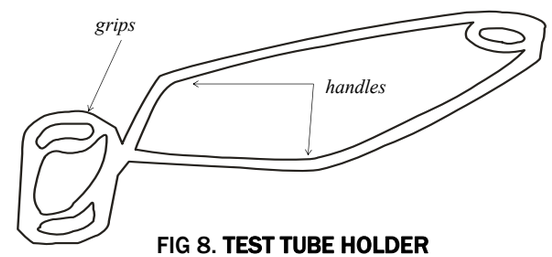

FIG 8. **TEST TUBE HOLDER**

A TEST TUBE HOLDER is for holding test tubes and vials containing substances.

To use this equipment, simultaneously press the handles of the test tube holder inward so the arms would open, allowing the test tube to fit in the grips. When the test tube is in between the grips, slacken the hold over the test tube holder and stop pressing the handle. This will clamp the test tube in place. See the figure on the right. Make sure the test tube is well- secured before performing the experiment.

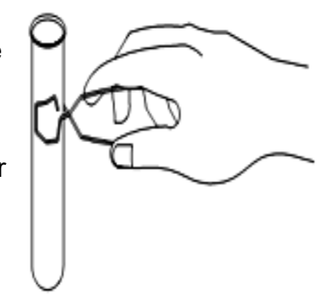

EQUIPMENT HANDLING AND GENERAL SAFETY PRECAUTIONS

To prevent damage to laboratory equipment and prolong its use, equipment must not be exposed to the following: A. Corrosive Chemicals; B. Heavy Loads; C. Impact Forces

A. CORROSIVE CHEMICALS

With proper use, these equipment will have many years of use. However, these are not immune to extreme conditions and abuse. High concentration reagents easily react with metals and plastics. Should strong acids or bases spill onto the equipment, wipe the exposed area with a wet, but not dripping, rag. After the activity, disassemble the setup and wash the affected parts with soap and water.

B. HEAVY LOADS

These equipment are capable of supporting any prescribed experimental setup inside the laboratory. These items are ONLY designed for mounting and fixing experiment setups. NEVER use them as carpentry tools.

C. IMPACT FORCES

Rods and clamps can be unintentionally dropped on the floor during some instances. Though the equipment is designed to withstand stress of this kind, you have to be careful because your foot will likely get hurt when hit by falling metal pieces.

General safety precautions when working with heated substances or using an open flame are the following:

1) Use gloves or a rag when handling heated rods or clamps since they conduct heat.

2) Keep parts that have rubber, plastic, or cork linings away from direct flame.

3) Always keep a fire extinguisher readily available when performing experiments that involve heating.

Procedure:

1. Assemble the experiment setup as shown.
2. Pour about 20 ml water into the flask and 200 ml water into the beaker.
3. Insert the shorter end of the glass tubing into the hole of the rubber stopper.
4. Set the Erlenmeyer flask about 10 mm above the tip of the wick of the alcohol burner. Use the universal clamp to hold the flask. See the figure in the preceding page.
5. Insert the rubber stopper firmly into the mouth of the flask.
6. See to it that the free end of the glass tubing is well-immersed in the water inside the beaker, but not touching the bottom.
7. Light the alcohol lamp and simultaneously start the clock. Observe the water in the beaker keenly. You should start seeing bubbles rising in the water inside the beaker after about 5 seconds. If after 10 seconds no bubbles are seen, check the rubber stopper-flask connection and the glass tubing-rubber stopper connection for possible leaks.
8. Bring the water inside the flask to boil for 1 or 2 minutes. After two minutes or so of boiling, remove the burner and extinguish the flame. Continue making observations for a few more minutes.
   CAUTION: YOU ARE WORKING WITH HOT MATERIALS

EXPECTED RESULTS OF THE EXPERIMENT

1. ***Observation:*** Bubbles rise in the water about 5 seconds after lighting the burner. Bubbles continue rising for several minutes more.
   Explanation: These are air and water vapor initially occupying the space above the water inside the flask, and trapped air within the water itself. They are pushed outside due to the increased pressure inside.
2. ***Observation:*** Cloudy appearance in the wall of the flask seen several minutes after heating.
   Explanation: This is condensed water vapor.
3. ***Observation:*** Several seconds after the flame was extinguished, water inside the beaker eventually flowed up in the flask.
   Explanation:
   a. Temperature inside the flask went down after the flame was put off.
   b. The water vapor inside the flask condensed; the space they once occupied was vacated, resulting in low pressure condition inside.
   c. The difference between atmospheric pressure and reduced pressure inside the flask resulted in net pressure that pushed the water from the beaker into the flask. Hence water was flowing up from the beaker into the flask.

SAMPLE EXPERIMENTS USING MULTIPURPOSE STAND-SETS

I. Flowing Up

Purpose: To demonstrate that liquids flow from high to low pressure region.

Materials:
Stand setup I
1 pc stand rod, 9.5 mm X 250 mm
1 pc stand rod, 9.5 mm X 500 mm
1 pc stand base
2 pcs stand supports
1 pc universal bosshead
1 pc universal clamp

Accessories:
1 pc Erlenmeyer flask, 250 ml
1 pc beaker, 250 ml
1 pc bent glass tubing 90^0
1 pc rubber stopper w/ 1 hole
1 pc alcohol burner
1 pc stop watch

Miscellaneous:
water
damp rags (as fire extinguisher)
matches

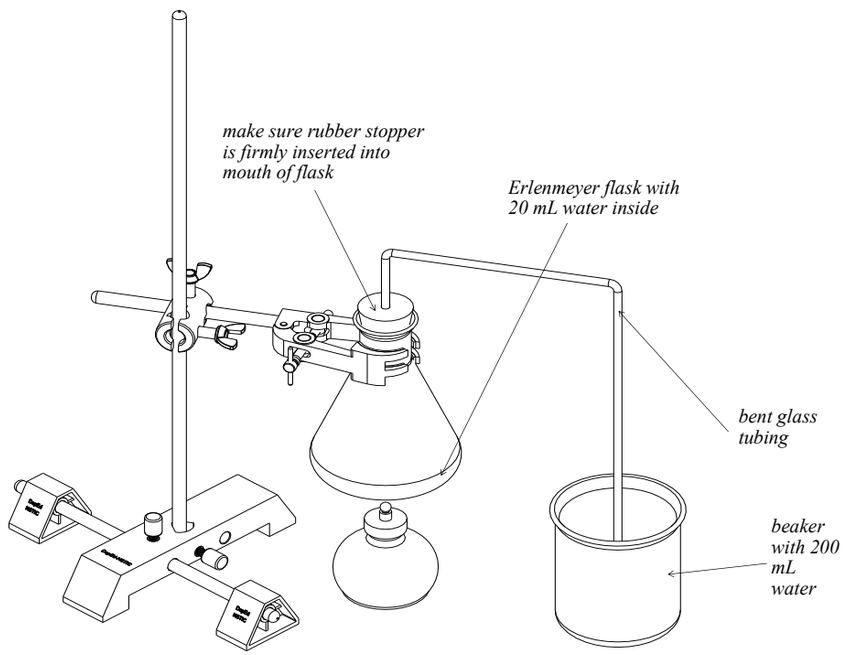

ASSEMBLY GUIDES :

Stand Setup I is composed of:
1 stand base
1 pair of stand supports
1 stand rod 9.5 mm X 250 mm
1 stand rod 9.5 mm X 500 mm

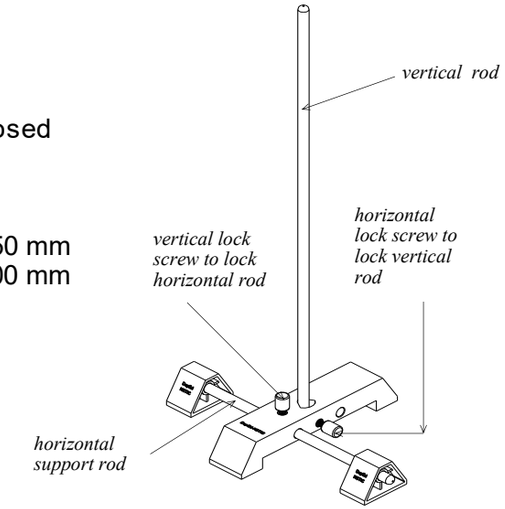

Stand Setup II is composed of:
2 stand bases
1 stand rod 9.5 mm X 250 mm

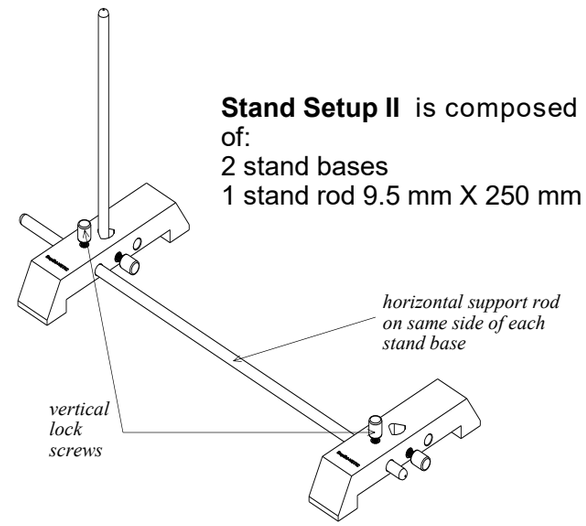

Note that in both STAND SETUP I and STAND SETUP II, the horizontal support rod (at the bottom) is always inserted through the hole of the stand base where there is the vertical lock screw above (see drawing). To lock all rods in place turn screws clockwise; turn in the opposite direction or counterclockwise to unlock.

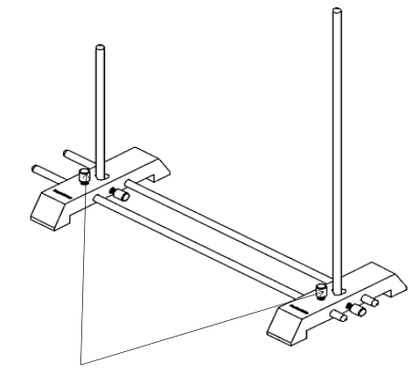

Stand Setup III is composed of:
2 pcs-stand base
4 pcs-9.5 mm diameter rods

This configuration allows the entire setup to be transported without dismantling the attached components. First make sure that the rods are well-secured by the lock screws before moving the setup. Note that the vertical lock screw on each stand base should be on the same side. See drawing on the left.

Multiclamp Assembly

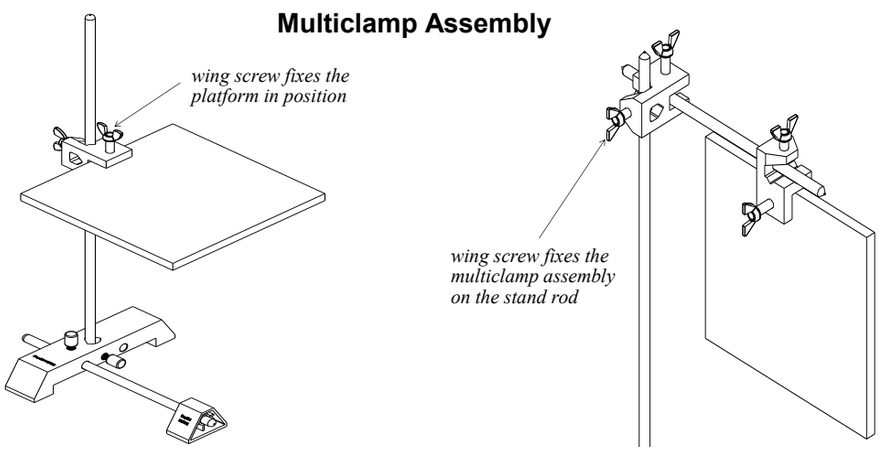

Multiclamps can interconnect several rods and mount setup components in different positions along the rod. Before the activity, see to it that all components are locked in place by their wing screws (see drawing above). To lock, turn the screw clockwise; to unlock, turn the screws counterclockwise. To make adjustments, partially turn the screw counterclockwise until it loosens. Slide the components to the desired position.

UNIVERSAL CLAMP, UNIVERSAL BOSSHEAD ASSEMBLIES

The **Universal Clamp** can be used to fix glassware in place. The setup components can be rotated and adjusted to different positions. Partially turn a screw counter clockwise until it loosens and proceed with the adjustments. Use your bare hands to manipulate each screw. Never use pliers or similar tools to tighten these.

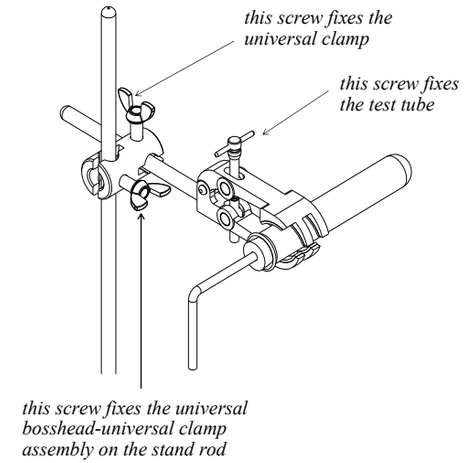

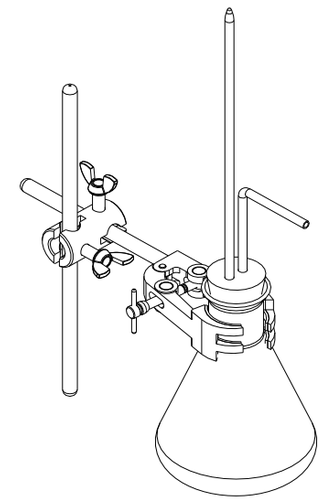

The **UNIVERSAL CLAMP** can also be used to hold a flask. Reminder: Do not over tighten the universal clamp screw because it might break the glassware.

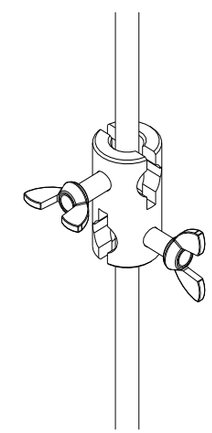

The **universal bosshead** can be used to connect one rod after another to vary the set-up length whenever needed.